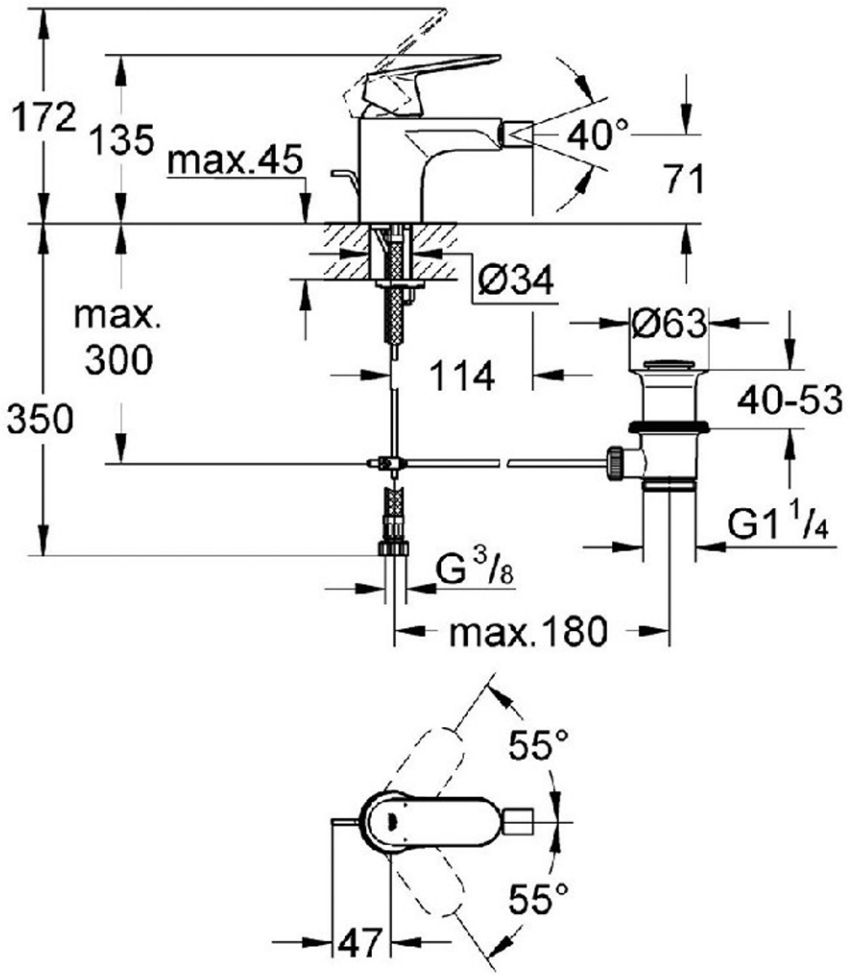
172
135
max.45
40°
71
Ø34
max.
300
Ø63
114
40-53
350
G1 1/4
G 3/8
max.180
55°
55°
47