rubinetterie MARIANI
RUBINETTERIE MARIANI S.r.l.
Via Berlino 2/4 - 24040 Zingonia (BG) - Tel. +39 035 4192911 - Fax +39 035 4192925
www.rubinetteriemariani.it - info@rubmar.it

Art. 126/AV5 P2

TERMOSTATICO
THERMO

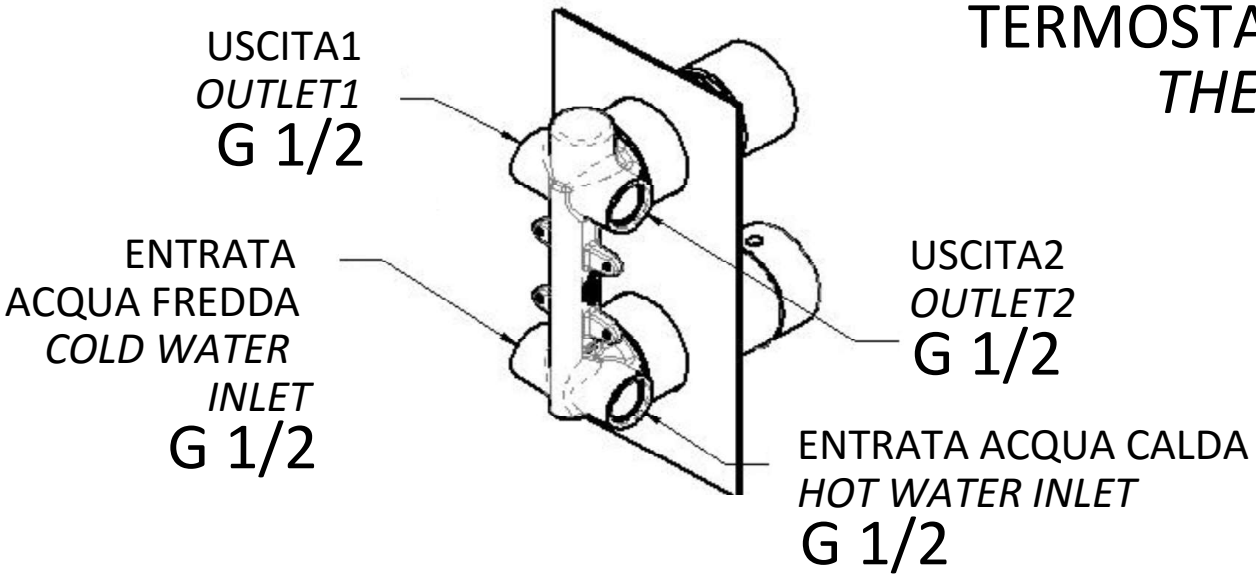

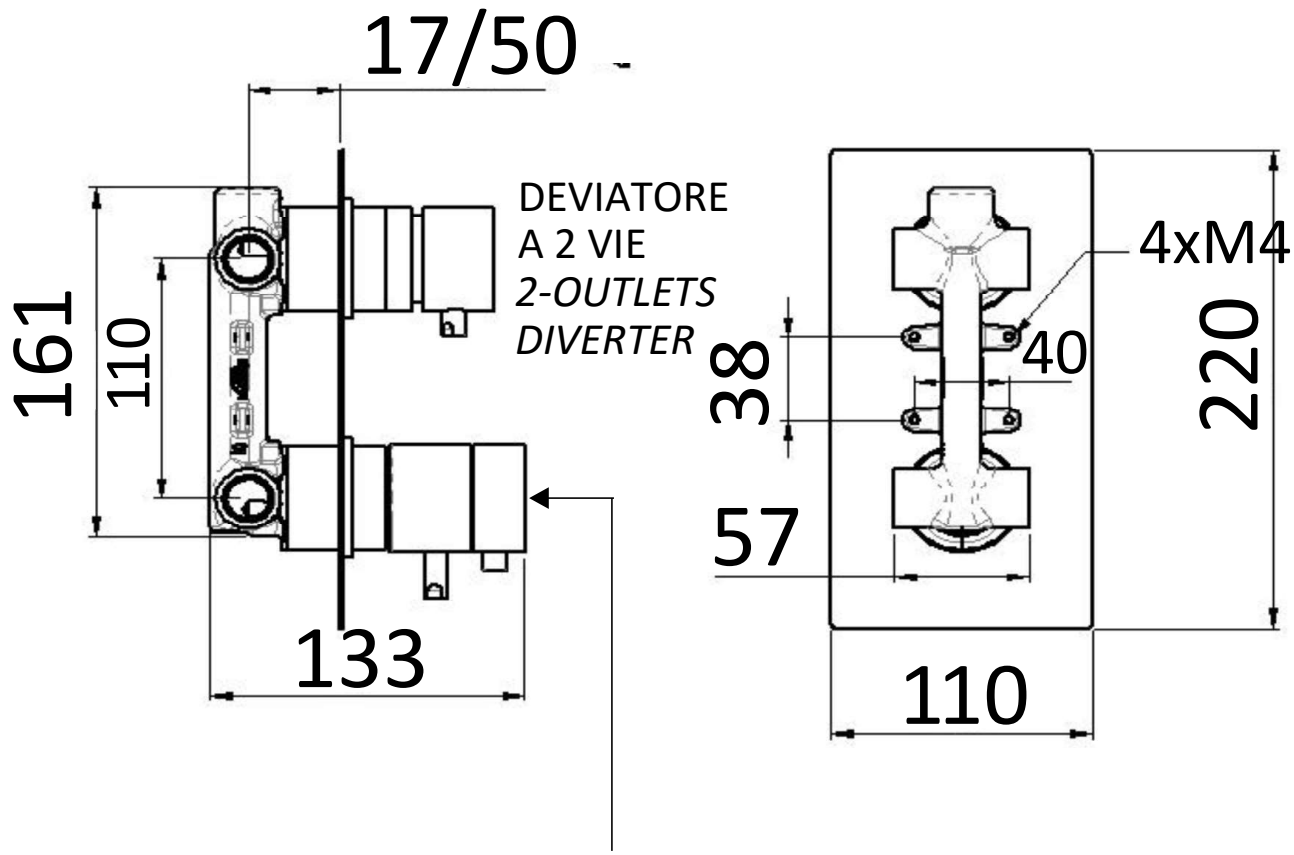

2 MANIGLIE COASSIALI
2 COAXIAL HANDLES
ON - OFF + STOP 38°C