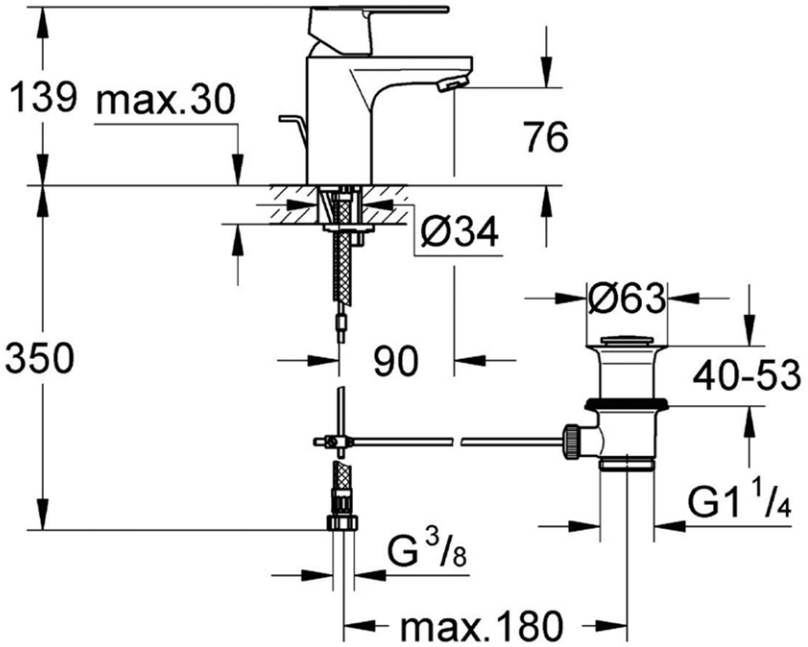
139
max.30
76
Ø34
Ø63
350
90
40-53
G1 1/4
G 3/8
max.180